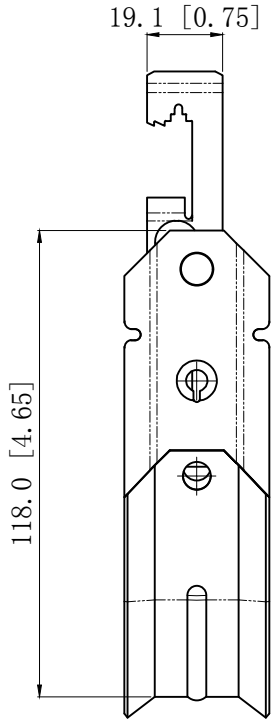

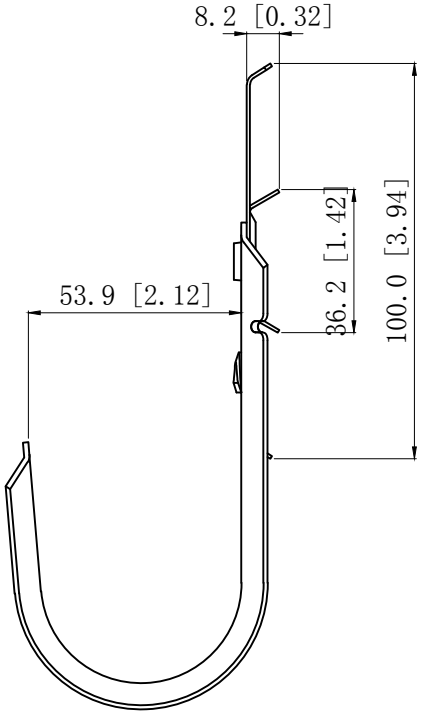

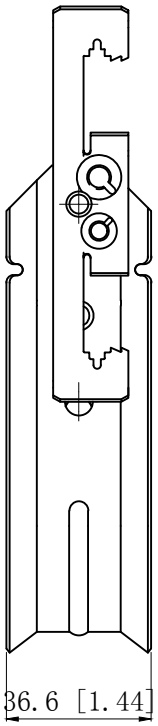

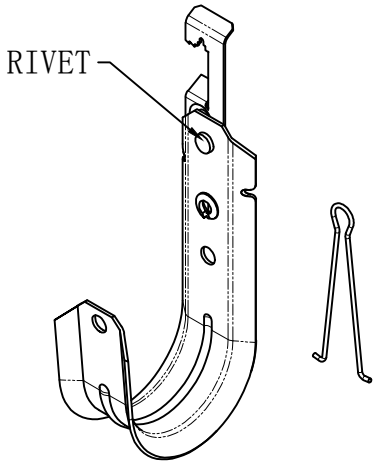

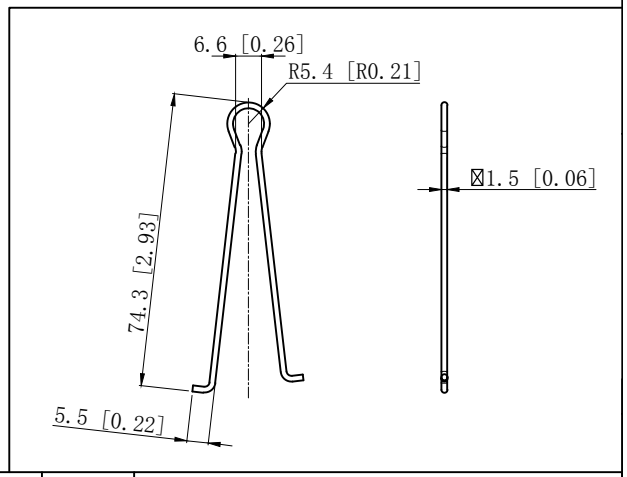

NOTES:

1. All dimensions in millimeters and [inches];
2. Material: J HOOK: C.R.S, thickness: 1.20 [0.047], Finish:Yellow zinc plated, thickness: min 5um;
   Bat Wing: C1008~1018, thickness: 0.80 [0.031], Finish: black E-coating;
3. Free of sharp edge and burrs.max burr 0.127[0.005];

TOLERANCES UNLESS OTHERWISE SPECIFIED			NAME	DATE
INCHES ANGULAR: X. X: ±0.1 X. X X: ±0.05 X. X X X: ±0.008	MILLIMETER ANGULAR: X: ±2.54 X. X: ±1.27 X. X X: ±0.203	DRAMN		
		CHECKED		
		APPROVED (A)		
MATERIAL C.R.S		APPROVED (Customer)		
FINISH Yellow zinc plated				

THIRD ANGLE PROJECTION

TITLE

SIZE	DWG NO.	REV
A4	S45-JHW32-XX	A

SCALE: 1:1 | PRINT DATE | REFERENCES | SHEET 1 OF 1